Scandia

AUSTRALIS RANGE

OWNERS MANUAL

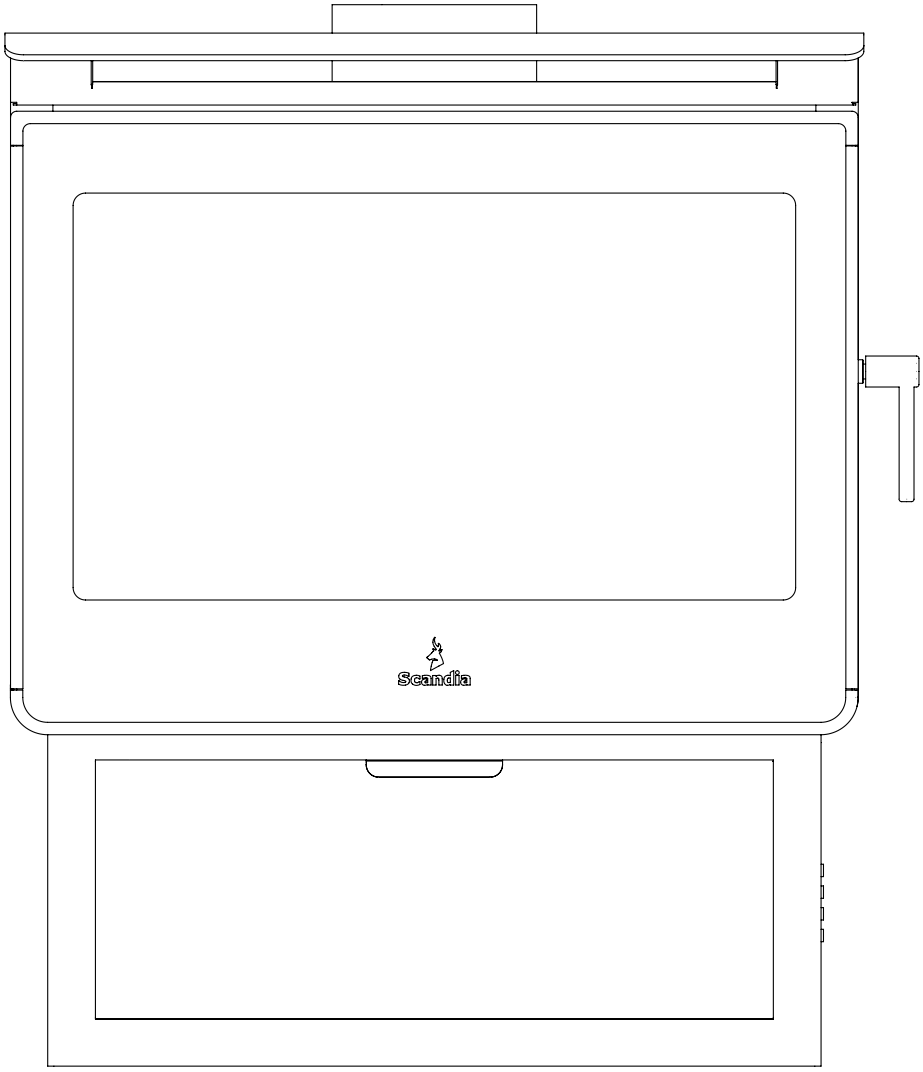

Australis M	SG010100008
Australis L	SG010100009

Scandia Group Pty Ltd

Head Office
58 Access Way,
Carrum Downs VIC 3201
Australia

+61 3 8579 5900
service@scandiastoves.com.au
www.scandiastoves.com.au

SC.AUS.Version 2.0 22/08/2025

Contents of manual may be updated without notice.
For the latest version of this manual please refer to our website: www.scandiastoves.com.au

SCANDIA AUSTRALIS RANGE

Model Name	Model Number
Australis M	SG010100008
Australis L	SG010100009

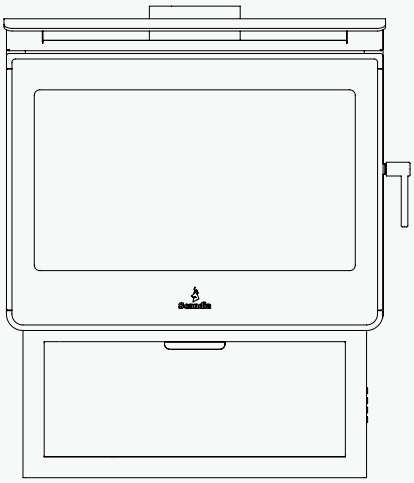

CONTENTS

Wood Heater Safety	1
Before Installing your wood heater	2
Installation	4
Operating your wood heater	13
Wood heater maintenance	17
Trouble Shooting	19
Warranty	20
Australis M Exploded View	22
Australis M Spare Parts List	23
Australis L Exploded View	24
Australis L Spare Parts List	25

INTRODUCTION

Congratulations on purchasing a genuine Scandia Wood heater. When cared for properly, these high quality, finely crafted wood heaters will offer many years of reliable performance. This instruction manual has been developed to ensure optimum performance from your Scandia wood heater. It's very important that you thoroughly read and understand all instructions before using your new wood heater.

COUNCIL REQUIREMENTS

Check Local Council Requirements E.g. permits

When installing, operating and maintaining your wood heater, follow the guidelines presented in these instructions, and make them available to anyone using or servicing the wood heater.

Your city, town, state or territory may require a building permit to install a solid fuel burning appliance.

Always consult your local building inspector or local council to determine what regulations apply in your area.

WARNING! Important information

Your wood heater must be installed by a qualified person whose work conforms with local council regulations, Australian standards & manufacturers recommendations. Failure to do so will void your warranty and could possibly void any home insurance.

⚠ CAUTION! Important Information

WOOD HEATER SAFETY

When properly maintained and operated your wood heater should give you many years of service, however there are important safety aspects of these products that you need to be aware of when operating a wood heater.

1.	This appliance is not intended for use by persons (including children) with reduced physical, sensory or mental capabilities, or lack of experience and knowledge, unless they have been given supervision or instruction concerning use of the appliance by a person responsible for their safety.
2.	Children should be supervised to ensure that they do not play with the appliance.
3.	If the electrical supply cord is damaged, it must be replaced by the manufacturer, it's service agent or similarly qualified persons in order to avoid hazard.
4.	Never place combustible items such as but not limited to furniture, fabric or wood within the specified clearances to combustibles.
5.	The burning of wood gives off gases which can be extremely dangerous. Wood heaters are designed so that under normal operating circumstances these gases pass up the flue chimney system and cannot escape into your home, however it is important that your flue system is properly installed and that you check all joints regularly to ensure that there are no cracks or gaps, check the door sealing rope and replace when damaged/worn. We recommend a smoke alarm be fitted in rooms where wood heaters are installed. Do not use your wood heater in a room where negative pressure conditions exist. Negative pressure environments can cause products of combustion to be drawn from the fireplace into the room. Caution should be taken when using any form of extraction in a room where a wood heater is installed.
6.	This appliance is designed to specifically burn dry hardwood. Do not burn rubbish, driftwood, flammable liquids or any substance containing salts or corrosives.
7.	Creosote and soot may accumulate in your flue pipe and chimney. This may ignite, causing a chimney fire. If you suspect a chimney fire close down the air controls on the wood heater, if the fire persists evacuate people from the building and call the Fire Brigade. To prevent the accumulation of soot or creosote, check the flue and chimney regularly and clean as necessary. Good burning, hot wood heaters will generally cause a lot less build-up than slow burning wood heaters, likewise dry wood will cause less build-up than wet wood. We recommend a fire extinguisher be available where wood heaters are in operation. In the event of a chimney fire do not re-light the wood heater until the heater and the flue chimney system have been thoroughly checked and repaired/replaced as necessary.
8.	Wood heaters get extremely hot and should not be touched when lit. When young children are in the area, we recommend the use of a suitable fire guard around the wood heater. Always wear protective gloves when reloading wood heater.
9.	Never over-fire your wood heater. If external parts of your wood heater are glowing red then the wood heater is over-firing and your draught settings should be reduced. Never interfere with the draught mechanisms or adjust your air settings outside those limits set when the wood heater is manufactured. Never use a secondary fan to supply or extract air to the wood heater.
10.	All users of the wood heater should be aware of the contents of this manual. Please leave this manual where it is accessible to wood heater users and do not allow anyone to use the wood heater that is unfamiliar with its correct operation.
11.	Never use the wood heater if any parts are missing or damaged, only use genuine parts as replacements. Never modify your wood heater.

BEFORE INSTALLING YOUR WOOD HEATER

You need to consider the following to ensure the safe operation of your wood heater:

- Provision of adequate air to support efficient combustion of the fuel.
- A well sealed flue/chimney system, hereinafter referred to as the "flue system".
- The protection of combustible materials in proximity of the wood heater.
- A suitable base on which to place your wood heater.

ADEQUATE PROVISION OF AIR

It is essential for the safe and efficient use of your wood heater that you provide an adequate air supply to your wood heater.

This may mean the provision of an outside air supply to the room, especially if there are extraction units such as cooker hoods or clothes dryers in the vicinity. Failure to do so will mean that fuel is burned inefficiently causing smoke, blackening the glass and may also cause smoke to come back into the room. As a simple check for this open a door or window in the room and check if the wood heater burns more efficiently.

The Australis M and L comes with a combustion air supply duct located at the bottom rear of the appliance. The appliance can be either be installed with or without a air supply duct.

If installing with an exterial air supply duct:

- The materials must be fireproof.
- The duct must not have more than 2 right angle bends and a maximum length of 3m
- Do not use insulated duct as this causes condensation.

*The outer diameter of the external combustion air supply duct is 90mm.

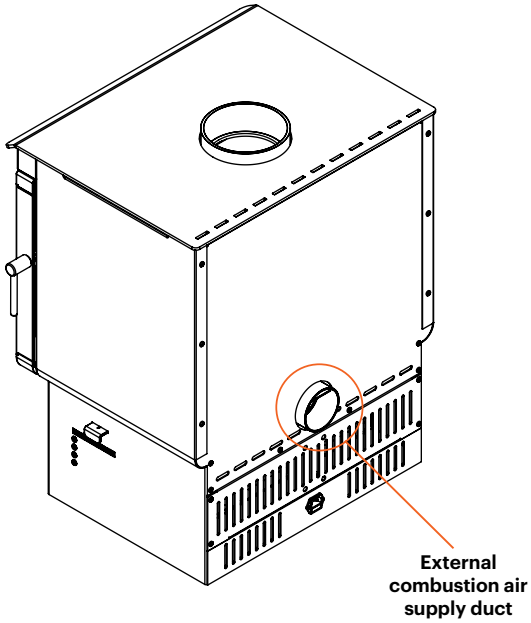

WELL SEALED FLUE SYSTEM

Under no circumstances should you use aluminum or galvanized steel active pipes for your wood heater flue. Always fit active pipes with the narrow crimped side down, this allows any creosote to run down the inside of the pipe and not to come out and cause an unsightly mess and possible fire hazard.

Pipe bends should be kept to a minimum and we do not recommend using more than 2 bends on any installation. Flues must not pass through ceilings, floors, attics, roofs, or combustible walls without adequate and approved insulation being provided to protect combustible materials.

The chimney and flue provide a means of taking combusted fuel from the wood heater, as well as a draught to enable the wood heater to work. It is essential that the flue system is kept in good condition and there are no breaks or cracks allowing contact with any other combustible materials of the house. It is also essential that the flue system is kept clean and seals are maintained to ensure the draught is not lost.

The open end of the flue system must be above the height of the apex of the building and any other obstructions, such as trees, which are within 3 meters (10ft) of the flue system. Failure to do this will affect the efficiency of the wood heater and may cause down draughts which will mean dangerous products of combustion are emitted into the room.

Under no circumstances should the flue pipe be less than 6" (152mm) internal diameter.

CLEARANCES TO COMBUSTIBLES

It is extremely important that you respect required installation distances and that you respect local installation regulations.

This is for your safety! The manufacturer is not responsible for the product, if it is not installed following these recommendations. These clearances may only be reduced by means approved by the regulatory authority.

A combustible surface is anything that can burn (i.e. plaster, wall paper, wood, fabrics etc.) These surfaces are not limited to those that are visible and also include materials that are behind non-combustible materials. If you are not sure of the combustible nature of a material, consult your local fire officials.

It is the responsibility of the purchaser and installer to ensure all finishes (including but not limited to render, paint, tiles, stone and other wall finishes) near and around the fireplace have the capacity to withstand high temperatures. Scandia Group Pty Ltd cannot be held responsible/liable for thermal expansion, cracking, blistering or damaging of any finishing materials.

BEFORE INSTALLING YOUR WOOD HEATER....continued

HEARTH REQUIREMENTS

Australis M: A minimum 950mm deep x 940mm wide x 6mm thick floor protector should be used under and in front of the appliance base when installing the appliance (see joint AS/NZS 2918:2018 3.3.2). The floor protector should extend 450mm in front of the appliance door and be placed centrally in the 940mm width. The Thermal resistivity of the floor protector is 0.026m^2. K/W for 6mm thick compressed board sheets.

Australis L: A minimum 1080mm deep x 1005mm wide x 12mm thick floor protector should be used under and in front of the appliance base when installing the appliance (see joint AS/NZS 2918:2018 3.3.2). The floor protector should extend 550mm in front of the appliance door and be placed centrally in the 1005mm width. The Thermal resistivity of the floor protector is 0.052m^2. K/W for 12mm thick compressed board sheets.

INSTALLATION

CLEARANCES TO COMBUSTIBLES

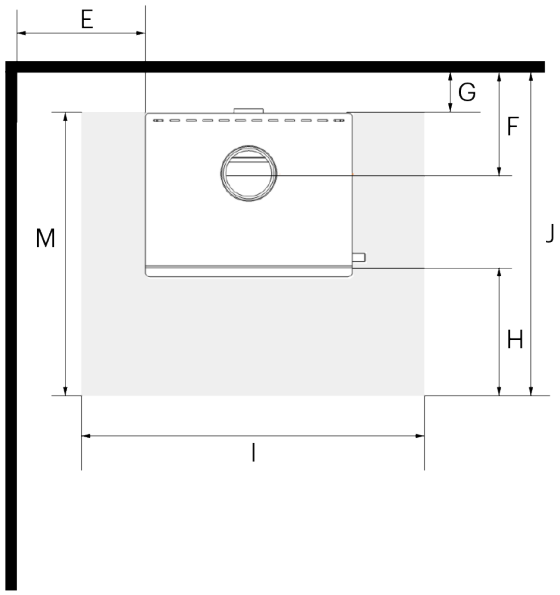

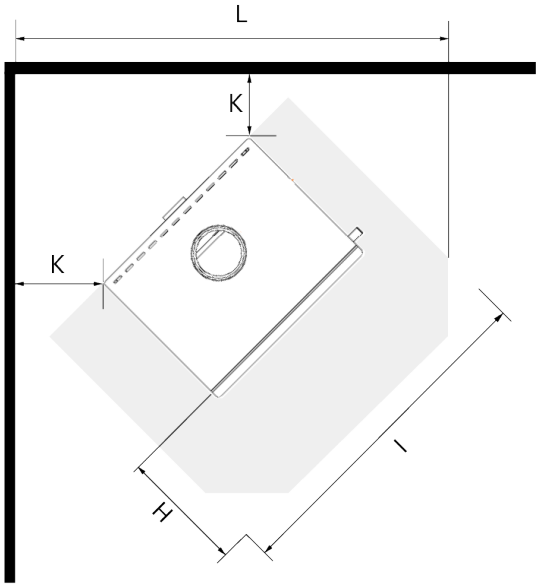

		Australis M		Australis L	
		Decro	Solid	Decro	Solid
E	Side of the appliance to side wall or surface	450mm	450mm	475mm	450mm
F	Centre of flue to rear wall or surface	311mm	311mm	311mm	336mm
G	Rear of appliance to rear wall or surface	125mm	125mm	125mm	150mm
H	Front of appliance to front of hearth	450mm	450mm	550mm	550mm
I	Minimum hearth width	940mm	940mm	1005mm	1005mm
J	Minimum hearth depth to rear wall or surface	1043mm	1043mm	1175mm	1200mm
K	Rear corner of applaince to side wall or surface	150mm	150mm	200mm	200mm
L	Minimum width of corner floor protection	1245mm	1245mm	1430mm	1430mm
M	Minimum hearth depth	950mm	950mm	1080mm	1080mm

All measurements are in 'mm'

The above clearances are applicable when using the Scandia Solid mesh flue kit.
(Decorative flue is fitted with an additional heat shield).

Manufacturers recommendation: Keep all combustible materials at least 1.22 metres (4 feet) away from the appliance. This include rugs, fabrics, furnishings, papers, firewood, etc. NEVER dry clothing on or within 1.22 metres of the appliance.

INSTALLATION ....continued

FOR CONNECTING INTO A STANDARD INSTALLATION USING SCANDIA FLUE KITS

The following drawing is meant as a guide only. Your wood heater must be installed by a qualified person whose work conforms with local council regulations, Australian/New Zealand standards (AS/NZS 2918:2018) & manufacturers recommendations.

Scandia wood heaters are independently tested to Australian Standards using a Scandia flue kit, we always recommend using a Scandia flue kit when installing a Scandia wood fire.

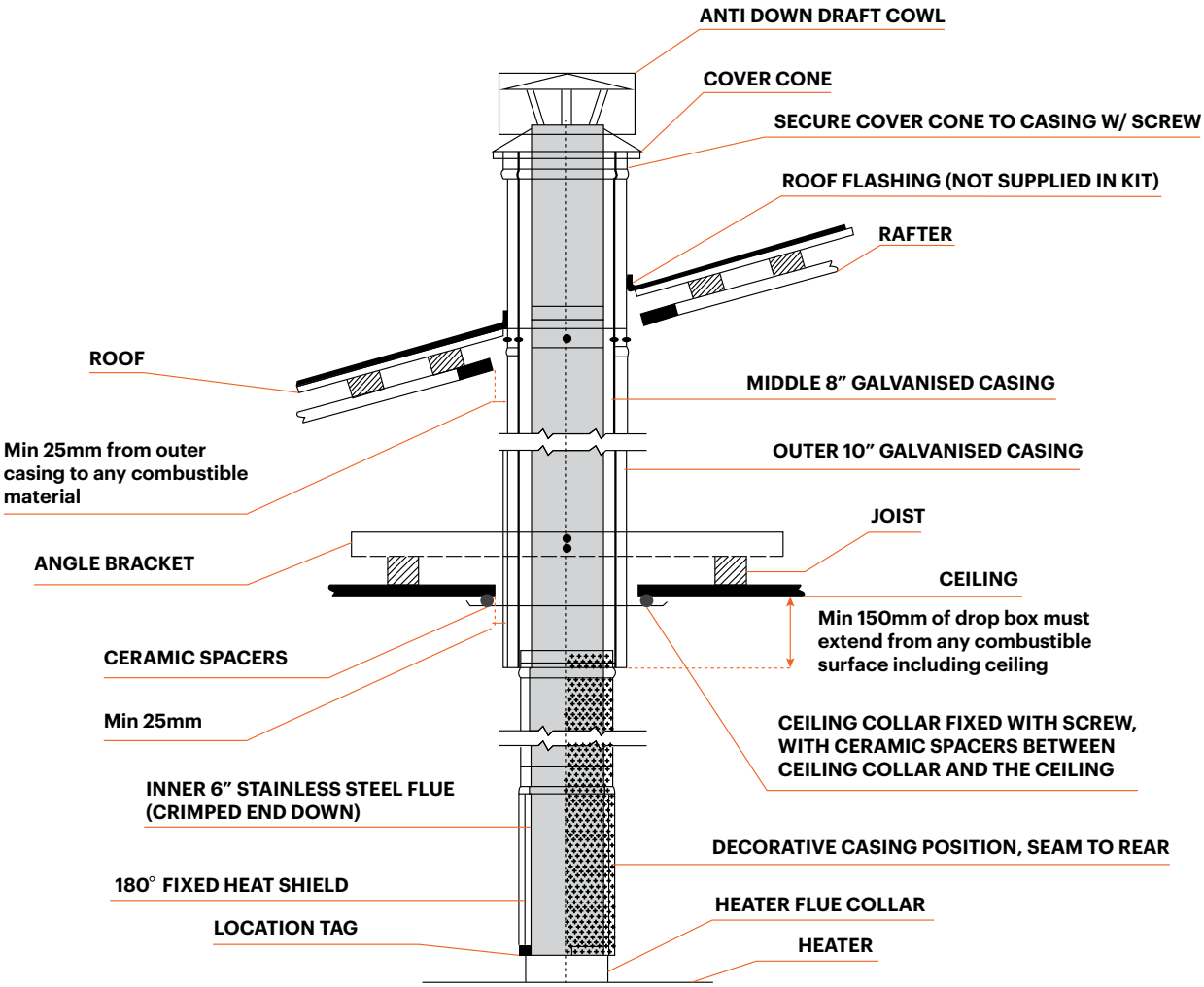

INSTALLATION ....continued

FOR CONNECTION INTO A ROOM SEALED FLUE KIT INSTALLATION

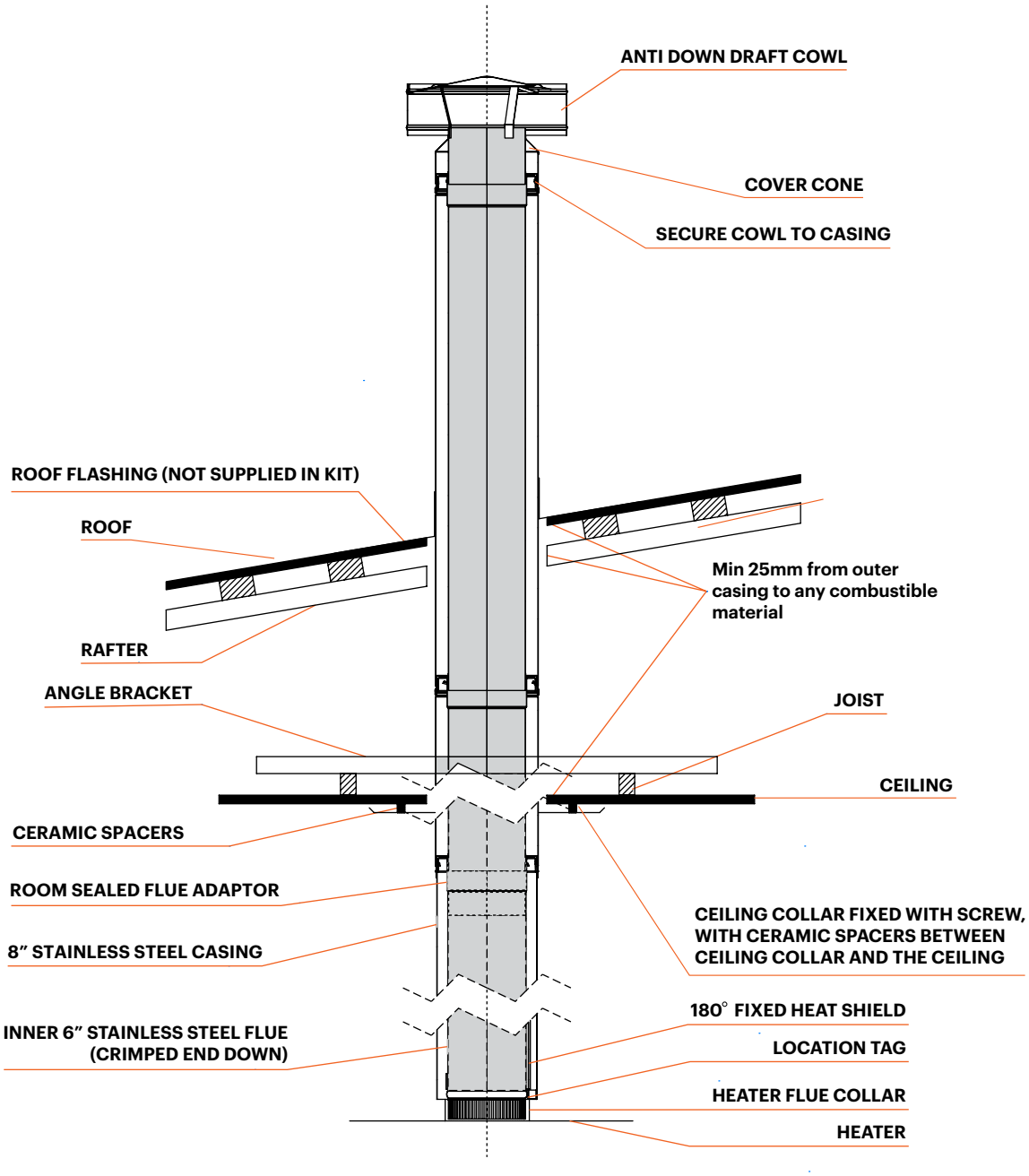

1.	Locate wood fire in it's proposed position according to manufacturers recommendations.
2.	Use a plumb bob to mark the ceiling in line with the centre of the flue collar.
3.	Check that the outer casing will clear all combustible materials by 25mm. Determine positions of noggins to avoid cutting, otherwise headers must be installed for strength.
4.	For a standard Default Flue Kit cut a 305mm diameter hole in the ceiling. If you have a Room Sealed Flue Kit cut a 255mm diameter hole in the ceiling. Directly above cut a hole in the roof to accommodate outer casing.
5.	Fix the angle brackets to the joists so that the drop box (first length of located casing) is located in the centre of the hole.

INSTALLATION ....continued

6.	For the Standard Default Flue Kit position the drop box between the angle brackets, keeping a 25mm clearance to combustibles. The located end of the drop box must protrude no less than 150mm down from the ceiling or any combustible material. Fix the drop box to the angle brackets. Follow these instructions for a Room Sealed Flue Kit.
7.	Add the remaining casings to the required height. Australian/New Zealand Standards state that "the flue pipe shall extend not less than 4.6m above the top of the floor protector". If the flue pipe is within 3 metres of the ridge, the flue pipe must protrude at least 600mm above the ridge of the roof. If the distance from the ridge is more than 3 metres, the flue pipe must protrude at least 1000mm above roof penetration. Additional lengths of casing and flue may be required to achieve this. The flue pipe must be more than 6 metres from any nearby structure. Other clearances may be applicable, it is up to the installer to ensure compliance with all regulations. **See Figure 1 and 2 on P9.**
8.	Install roof flashing (Additional accessory, not supplied in flue kit)
9.	Secure the Ceiling Collar in place using ceramic spacers and screws provided.
10.	For the Standard Default Flue Kit insert crimped end of the upper decorative flue (without internal stainless steel heat shield) up into the drop box. Then insert the crimped end of the lower decorative flue (with the internal stainless steel heat shield) up into bottom of the upper decorative flue. The lower decorative flue features locating tags on the non crimped end which rest on the heater flue collar. The solid heat shield section of the decorative mesh and stainless steel inner heat shield is to face the wall. For a Room Sealed Flue kit, connect flue sections together use the twist lock feature then fix using the supplied locking band, feed required sections up through the ceiling collar, fix the twist lock adapter to the heater then connect to the lower flue pipe section, fix sections together with locking bands. Once correct flue height achieved fix flue sections to upper ceiling angle brackets.
11.	For Standard Default Flue Kit Feed stainless steel flue through decorative flue and drop box through to the required height. Assemble flue pipes tight together as you go ensuring seams are straight. Secure each joint with three stainless steel rivets or screws spaced equally. Clean any finger prints or oils off stainless steel flue with methylated spirits.
12.	For Standard Default Flue Kit Trim the inner flue to the same height as the outer casing. Place cover cone and cowl over stainless steel flue & push cover cone over gal casing. Fix cover cone to gal casing with stainless steel pop rivets or screws. For Room Sealed Flue Kit Fit cover cone and cowl to top of flue section and fix into place using locking band.

MINIMUM INSTALLATION CLEARANCES

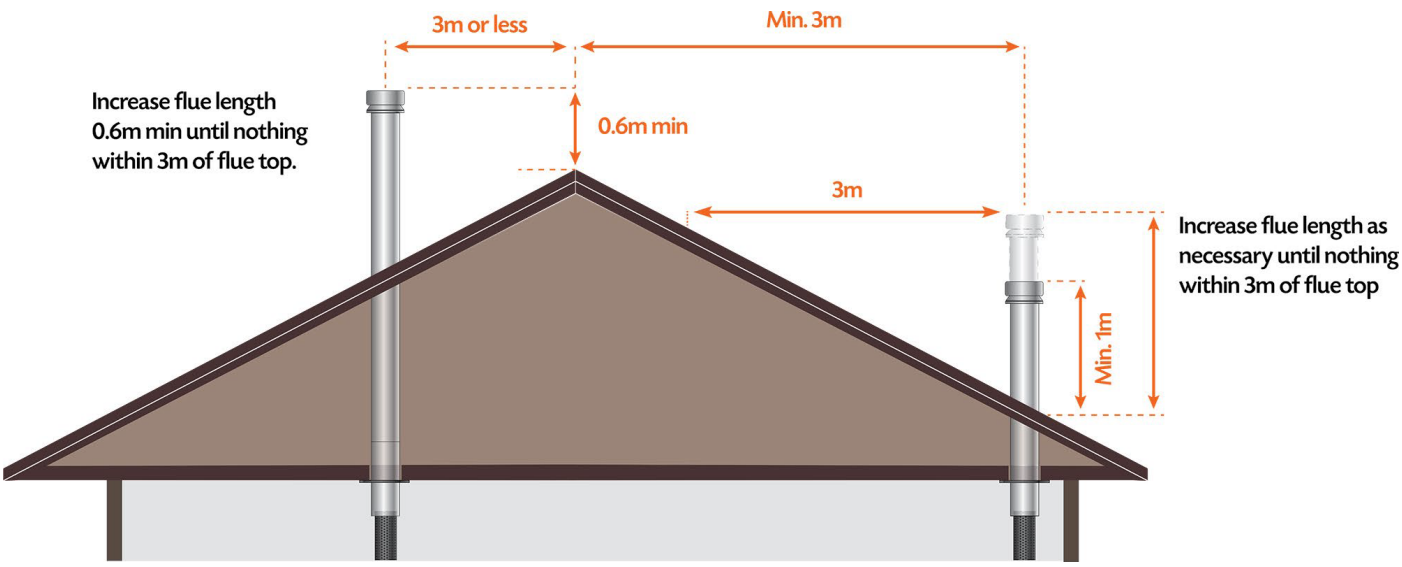

FIGURE 1

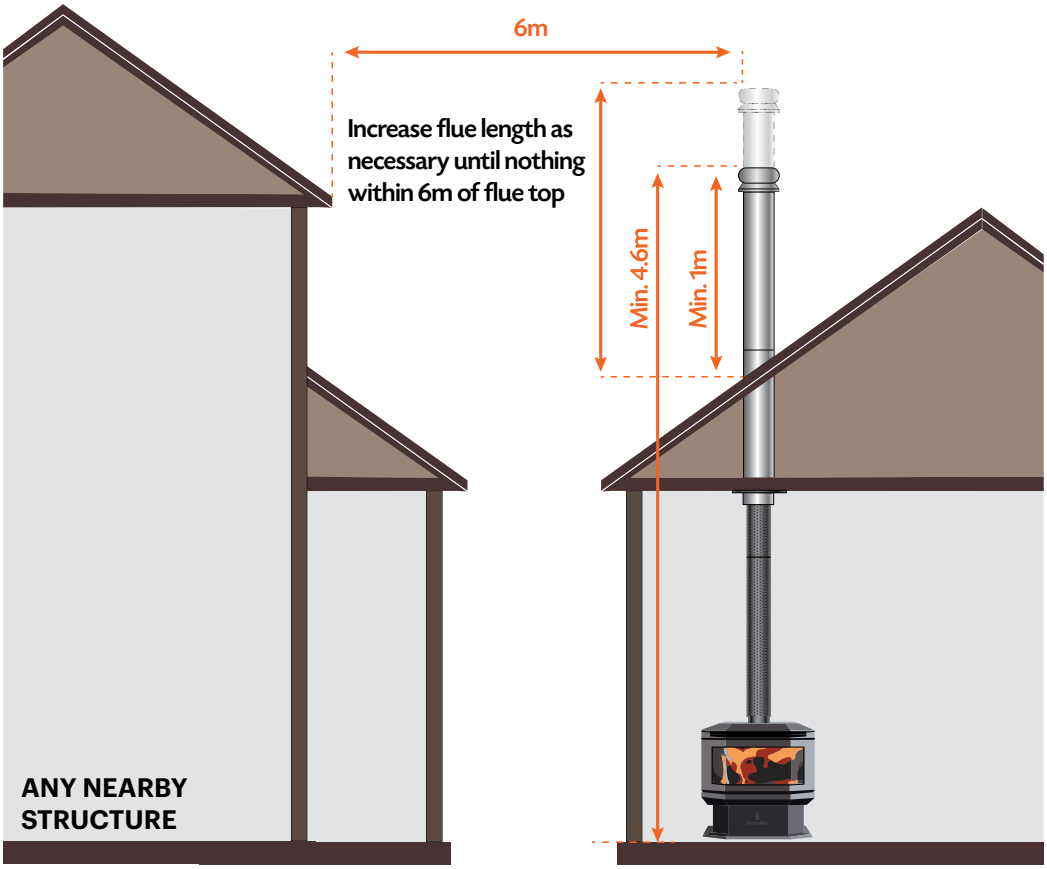

FIGURE 2

SECOND STORY INSTALLATION THROUGH SIDE WALL

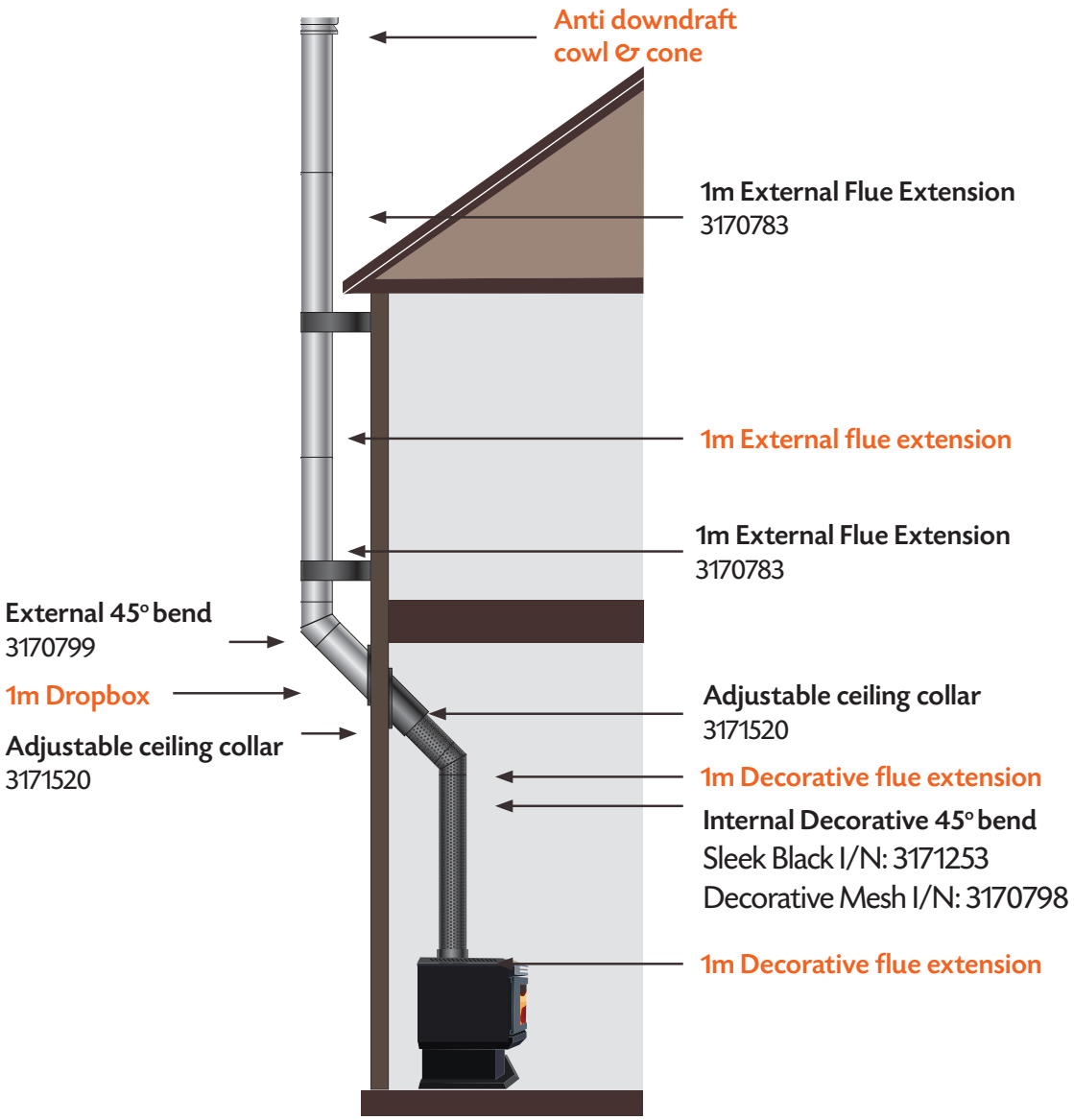

MULTI-STOREY WOOD FIRE INSTALLATION

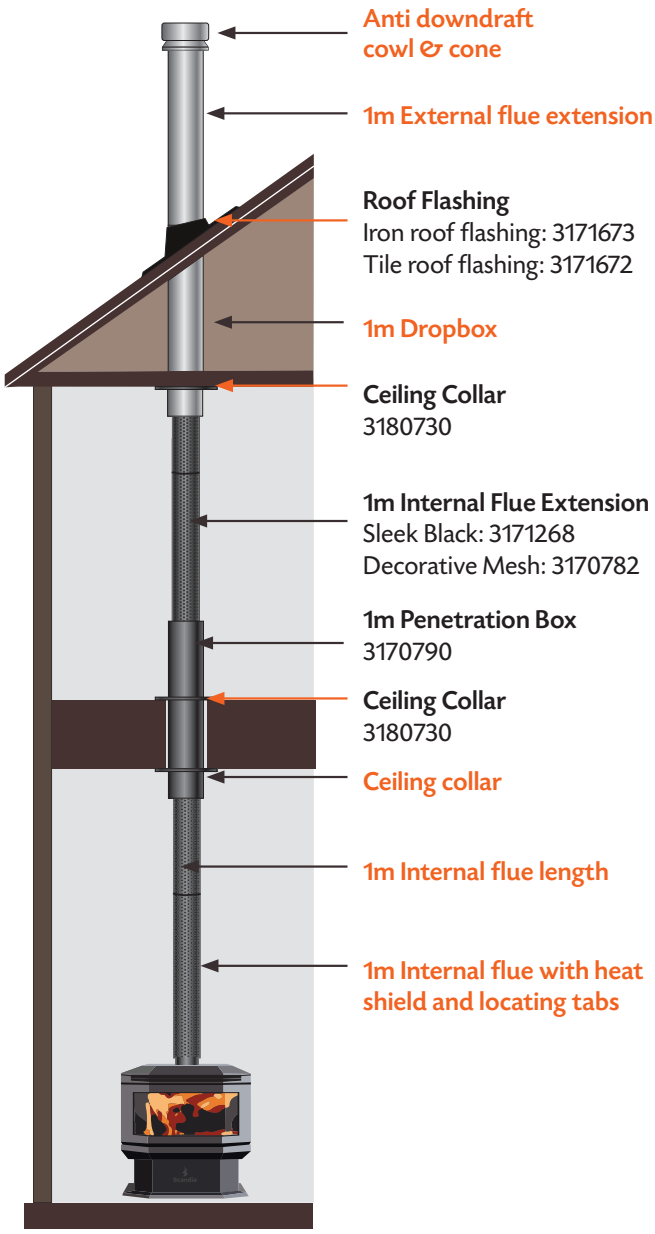

INSTALLATION ....continued

FIREBOX ASSEMBLY:

1.	Remove all loose items from the fire box. First install the top baffle. Place the baffle in the firebox with the bent edges facing the same direction as in the below drawings.
2.	Lift the front edge of the baffle up and rest it on the top of the front baffle support lugs, lift the rear of the baffle until the rectangle parts on the rear of the baffle align with the cutouts in the rear of the firebox, and slide the baffle rearwards, ensure that these rectangles are fully seated in the cutouts, the rear face of the baffle should be sitting against the rear of the fire box.
3.	Install the ash plugs into the cutouts in the base of the firebox, then install the base firebricks and align with the ash plugs, next install the rear bricks followed by the side bricks. Now install the brick retainers, 2 off corner sections and 1 off centre section. Now install the small square bricks over the ash plugs.

Australis M

1	Top Baffle
2	Firebrick Retainer
3	Firebricks - 267.5mm x 240mm x 25mm - Qty 2
4	Firebrick - 299mm x 240mm x 25mm - Qty 2
5	Brick Mitered RHS - 324mm x 266mm x 25mm - Qty 1
6	Brick Mitered LHS - 324mm x 266mm x 25mm - Qty 1
7	Verm Firebrick - 84mm x 84mm x 19mm - Qty 2
8	Ash Plug - Qty 2

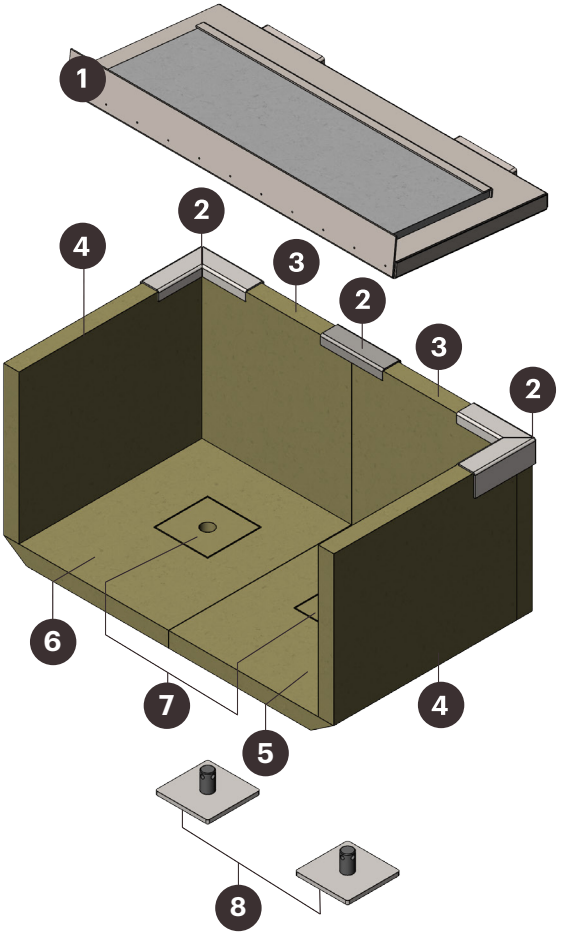

INSTALLATION ....continued

Australis L

1	Top Baffle
2	Firebrick Retainer
3	Firebricks - 267.5mm x 240mm x 25mm - Qty 2
4	Firebrick - 299mm x 240mm x 25mm - Qty 2
5	Brick Mitered RHS - 324mm x 266mm x 25mm - Qty 1
6	Brick Mitered LHS - 324mm x 266mm x 25mm - Qty 1
7	Verm Firebrick - 84mm x 84mm x 19mm - Qty 2
8	Ash Plug - Qty 2

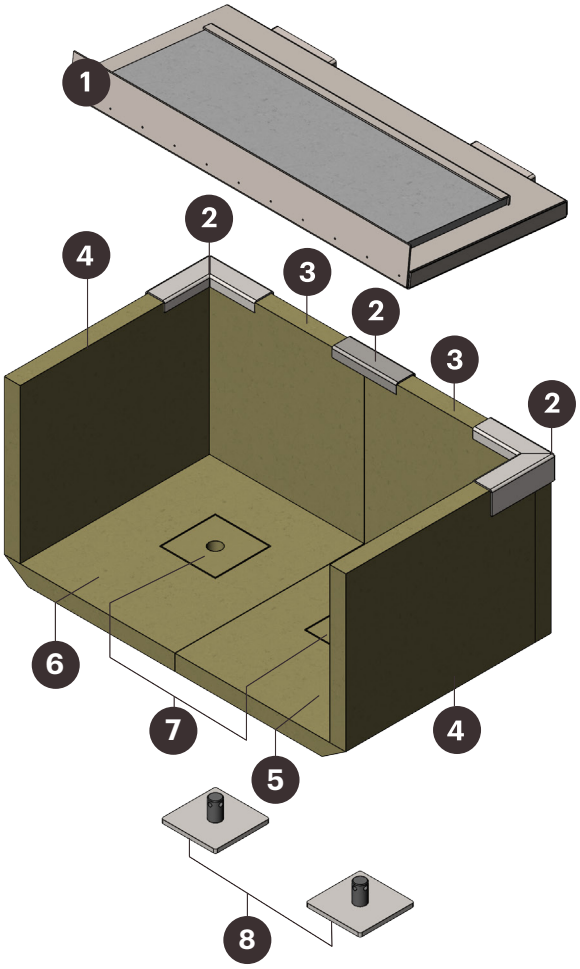

OPERATING YOUR WOOD HEATER

FAN OPERATION

Step 1	Plug heater into a power outlet
Step 2	Locate fan switch on pedestal
Step 3	Adjust 3 speed fan as desired

CONTROLS AND THEIR USE

1	Power cable for fan operation
2	3 Speed Fan switch
3	Air Slide to control primary air intake CLOSED ◄——► OPEN

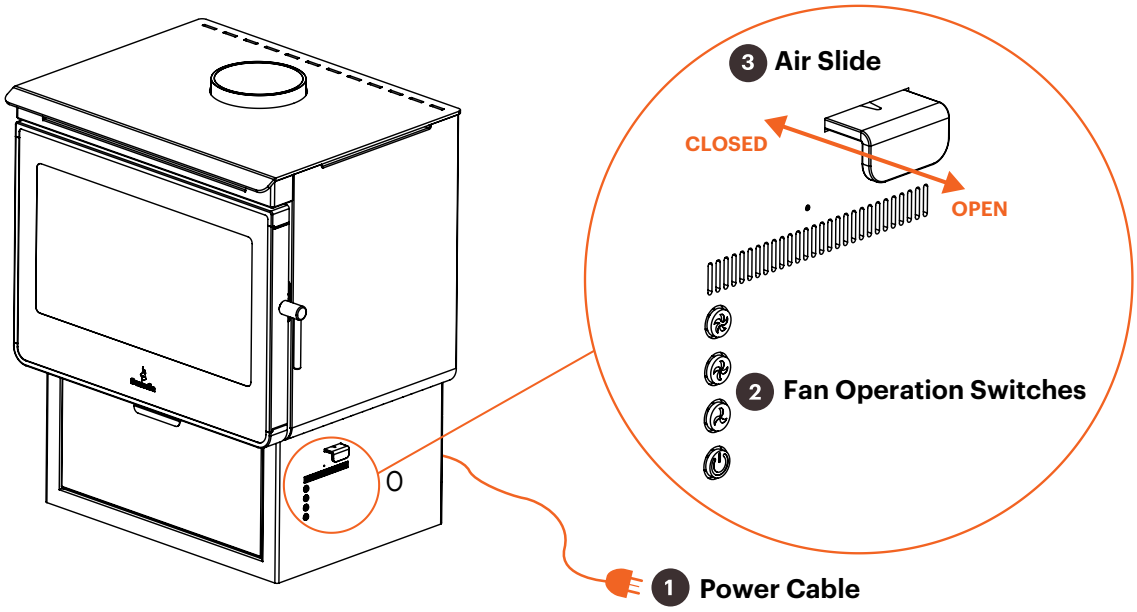

FUEL

Your wood heater is designed to burn dry hardwood only.

It is NOT designed to burn the following:

- Soft wood
- Treated or painted wood
- Paper or cardboard, other than small amounts used to light stove.
- Plastics
- Synthetic fuel or logs that are not approved for solid fuel stoves
- Household rubbish
- Liquid fuels

Burning these or other products for which the wood heater was not designed may damage the wood heater and cause a fire hazard or release toxic fumes.

Fuel should be stored in a dry place; wood should be dried for at least 1 year and have a moisture content of less than 20%. Wet wood may cause serious creosote build up, which may damage your flue system and even your wood heater. Therefore the use of green, sappy or wet wood is strongly discouraged.

CAUTION! IMPORTANT INFORMATION FIRST OPERATION OF STOVE

When operating, this unit will get extremely hot. Do Not Touch, use tools where necessary. You should begin using your wood heater by lighting small fires which get progressively larger. We recommend lighting approximately 5 small fires before you put the wood heater into full service. Allow the wood heater to fully cool between each of these fires. There may be some smell and a small amount of smoke from the wood heater during the initial operations. This is perfectly normal and is merely the curing of the wood heater paint. Opening a window or door to provide additional ventilation will help alleviate this.

OPERATING YOUR WOOD HEATER ....continued

AIR CONTROLS

Your wood heater needs air to burn the fuel. This air is supplied through a primary air slide at the lower right hand side of your wood heater. On the Australis M and L secondary air is drawn into the top rear of the firebox which is not adjustable.

Primary air, as the name suggests, is used for the initial burning of the fuel and is also used to keep the stove glass clean. Secondary air is used for secondary combustion, which makes the stove more efficient and reduces emissions.

The settings of the primary air control very much depends on draught and local conditions and after a few fires, you should have a good idea of the best settings for your wood heater. The air slide control should be fully opened when lighting the fire.

Once the fire is established, the air slide control may be adjusted as required. Reducing the air intake will cause the wood heater to burn slower. This may cause some blackening of the stove glass, but this should burn off once the wood heater is burning brightly again.

LIGHTING THE FIRE

1. Ensure the air slide is in the open position or high position
2. Place firelighters approx. 10 – 15cm apart depending on firebox size. Don't use newspaper as it burns too quickly and creates excessive emissions
3. Now place softwood kindling in a criss-cross pattern on top of the firelighters. Soft wood kindling is best because the fire will light quicker and burn hotter.
4. Light the fire using either match or gas lighter. Once kindling is ablaze you can close the door; however, do not latch the door, this will allow extra air into the firebox and gets the fire going quicker and cleaner. Leave the door like this for 5-10 minutes. Never leave an unlatched firebox door unattended, it could be a fire risk.
5. After 5-10 minutes, it's time to add pieces of hardwood to the firebox. The pieces of hard wood should be no wider than a drink can. Again, load the wood in a criss-cross pattern, ensuring the flame gets enough air.
6. Latch the door so it's completely closed for 30 minutes.
7. Expert tip: if your heater has a fan, do not turn it on for at least 45 minutes otherwise you'll just blow cold air over a cold firebox making your fire burn inefficiently and it can also blow cold air throughout the home.
8. After 30 minutes has passed its time to put the large pieces of hard wood on the fire. This wood should be no bigger than a loaf of bread. Close and latch the door after loading.
9. After 45 minutes your firebox will be fully ablaze and will be producing a consistent strong amount of heat. You can now lower the airside to slow the fire down and create the comfort level you require. If you have a fan fitted you can now turn it on.

REFUELING

Before refueling your wood heater, turn the air supply to high for a few moments until there is a good fire in the heater. This will ensure there is no build-up of harmful gases in the wood heater when the door is opened and will also get the new fuel burning quickly and not allow it to kill the fire. Open the door slowly in case any logs or coal have fallen against the glass. Opening the door quickly may result in smoke being drawn into the room.

To reload the wood heater, open the door and feed the fuel in slowly always using either tongs, a small shovel along with protective gloves. Do not overfill the wood heater. It is always better to put in small loads often rather than big fills less frequently. Wood should be loaded in a front to back direction, this helps air flow as well as reducing the risk of logs falling forward. Close the door gently after wood heater is reloaded.

OPERATING YOUR WOOD HEATER ....continued

OVERNIGHT BURNING

Your wood heater is designed to maximise burn times. Best results are achieved when you establish a good fuel bed in the wood heater and allow it to burn for about 30 minutes before closing the air slide control fully.

When you return to your wood heater, fully open the air slide control until you have a good fire and then set to normal operating levels. Do not add fuel until the fire bed is hot and red. Then add a little for the first time and allow that to ignite before adding more. During overnight burning, the wood heater glass may blacken, but when a hot fire is established again this should burn off.

ASH REMOVAL

Both the Australis M and L have a built-in ash drawer that allows easy and dust-free removal of ash. Access to the ash drawer is via opening the front panel located below the door of the heater.

To remove the ash, first ensure the contents of the firebox are **COOL – DO NOT REMOVE HOT ASH OR EMBERS**. Remove any unburnt wood or large chunks of coal, then use the lifting tool supplied to remove the two square plugs located at the base of the firebox.

With the plugs removed, sweep the ash into the chute. Please note that the maximum volume of ash that the drawer can handle is approximately 25mm of level ash coverage in the firebox. Once the ash has been emptied from the firebox, pull the ash drawer out, close the lid, and dispose of the ash.

Before sliding the ash drawer back into position, ensure the lid of the drawer is open; if the lid is closed, then the drawer won't slide into place. Finally, place the two plugs back into position.

***CAUTION* Before lighting your next fire, ensure both plugs have been installed correctly and the drawer is fully in place with its lid open.**

RF Remote

Simple operation of your radio frequency (RF) remote control for your wood heater's radio frequency controlled fan.

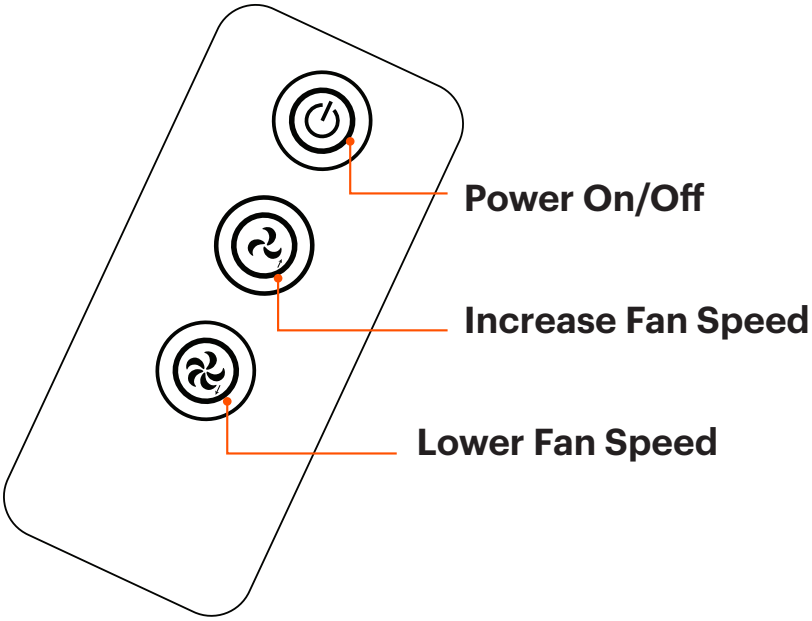

NORMAL OPERATION

1. Ensure that the power cord is plugged into both the rear of the fireplace and the 240V power outlet.
2. Press the power On/Off button to turn on the fan
3. Select one of the 3 fan speeds, press either the increase fan speed or lower fan speed buttons.

NOTE:

Your fireplace fan remote should come pre-synced, if not please go through the sync process, for replacement remotes, please remember to pull the battery saver plastic tab prior to beginning the process.

Re-syncing your RF Remote

Follow these simple steps to re-synchronise your remote to your wood fire:

1. Sync Remote to Receiver

Ensure 240v power outlet is off, then plug in one end of the power plug to the 240v power outlet and plug the other end into the back of the fireplace.

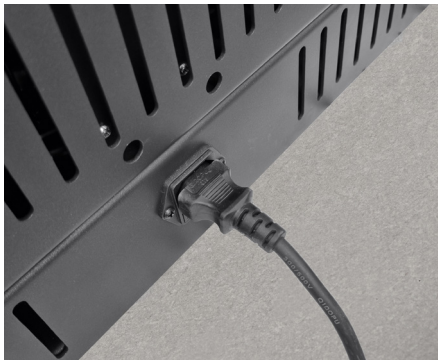

2. Turn on the Power Outlet

Turn on the 240V power outlet, the LED lights on the manual button controls will beep and light up, confirming power is being received by the fan controls.

3. Using the Remote

Take your remote and press down both the increase fan speed and lower fan speed buttons at the same time for approximately 2 seconds.

4. Confirm the Remote Signal

The fan receiver will then beep once more, which confirms the remote signal has now been synchronised. You can now use the remote control.

Head Office
58 Access Way,
Carrum Downs VIC 3201
Australia

Scandia Group Pty Ltd
(03) 8579 5900
service@scandiastoves.com.au
www.scandiastoves.com.au

WOOD HEATER MAINTENANCE

CHECK YOUR WOOD HEATER REGULARLY

Initially, we recommend you check your flue system at least once per month. After the first few months you will notice a pattern of soot and creosote build up and you can then determine an inspection interval for checking soot and creosote build up that is suitable for your wood heater installation.

Other checks, as listed below, should be carried out at least twice per year. If you notice anything wrong at any time it should be repaired immediately. Never use a wood heater that is in any way damaged or has a damaged flue.

1.	Check your flue system for build up of soot or creosote and for signs of damage to joints.
2.	To check flue outlet remove top of baffle by lifting and pulling out at end. Use a flashlight to check flue outlet. Clean and repair as necessary. Always replace top baffle before relighting stove.
3.	Check that glass is not cracked or chipped and that the sealing rope is in good condition. Replace as necessary.
4.	When the room is dark, use a strong flashlight to check the sealing of the wood heater at the edge and corners for leaks. Any leaks or cracks found should be repaired with fire cement or damaged parts should be replaced with genuine spare parts.
5.	During periods in inactivity or infrequent use, regularly alternate the position of the flue damper. We also recommend placing a silica bag in the firebox to absorb any moisture which may cause rust.
6.	Check that wood heater door is tight and well sealed when closed. Place a strip of paper into the wood heater and close the door, try to pull out paper. You should feel some resistance to your pull, check several points around the door. If it pulls out too easily, replace the rope and seal in place with a suitable high temperature sealant.
7.	Check baffle plate and firebricks. Baffle plate should be replaced if a hole appears in the surface of the plate. Firebricks should be replaced when they start to crumble or the firebox is exposed.

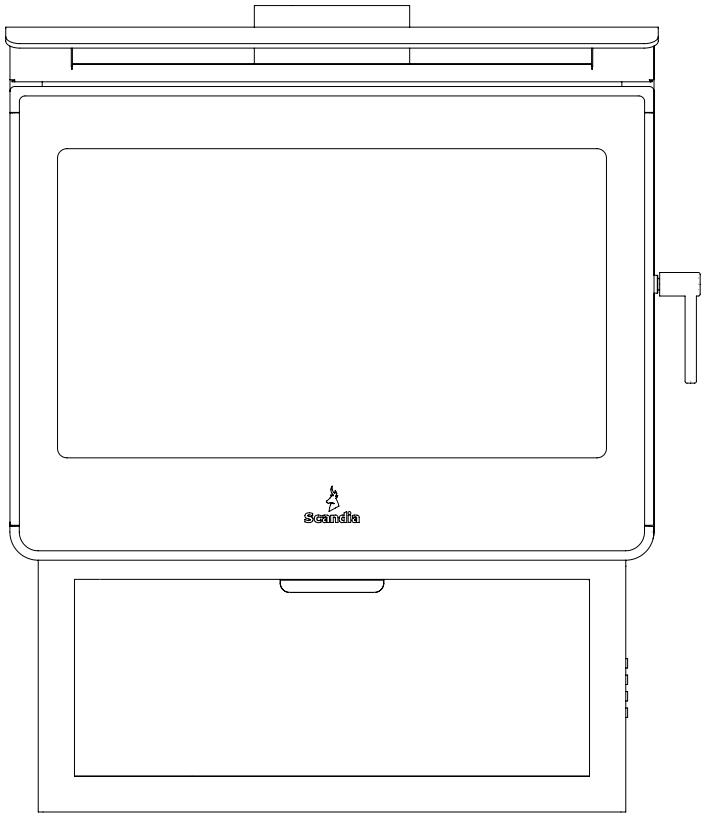

WOOD HEATER MAINTENANCE ....continued

CARE OF GLASS

At times, especially when the air controls are turned to low settings or when damp wood is used, the wood heater glass will blacken. This is caused by fuel that is not completely burnt, but the build-up on the inside of the glass will normally burn off when a good hot fire is established in the wood heater.

There may be times however when you need to clean the glass. To do this, use a soft cloth and a non-abrasive glass cleaner. Only ever clean the glass when the wood heater is cold. For best results select from Scandia's range of glass cleaning products. When loading fuel into the wood heater, always make sure it is not protruding out through the door opening, as this may break the glass when you close the door. This is especially relevant when loading logs. Always close the door gently.

If the glass does crack when the wood heater is lit, let the fire die out. Do not open the door until the wood heater has fully cooled. Replace the glass with the specified replacement part before re-using the wood heater.

DOOR ADJUSTMENTS

During normal use, the door may need periodic adjustment to maintain the heaters heating efficiency. Door closing tension and door leveling adjustments can be achieved by the following process:

Door leveling: With the door closed loosen the two hinge bolts, adjust the small grub screw (located above the top hinge bolt). Turning the grub screw anti-clockwise will rotate the door up while turning the grub screw clockwise rotates the door down. Take care not to adjust too far as this will affect the door locking mechanism. Once the door is level tighten the two hinge bolts.

Door closing tension adjustment: With the door open, locate the door locking pin and loosen the grub screw located on the top of the main barrel of the assembly (you may need to remove the side panel depending on the size of Hex Key being used). Rotate the door locking pin in 180° to 360° increments to adjust the sealing tension. To check correct tension, place a piece of paper on the sealing face and close the door, the paper will not pull out if the correct tension is set, if the paper pulls out continue to adjust the door locking pin until the correct tension is achieved. Once the correct tension is achieved tighten the grub screw on the main barrel assembly. If the door locking pin is screwed all the way in and the door still doesn't seal, replace the glass fibre rope seal, and repeat these steps.

REPLACING PARTS

Always use genuine replacement parts. Only ever make replacements when the wood heater is cold.

All replacement parts can be ordered from the Bunnings Special Orders desk at your local **Bunnings Warehouse.**

SURFACE FINISH

To clean your heater lightly dust with a duster. Some cleaning products may leave stains on the wood heater surface. Never use abrasive cloths as these may scratch the surface; take caution when using microfiber cloths as they can leave swirl marks if used in a circular motion. Painted wood heaters can be re-painted by using a good quality, high temperature wood heater paint. When re-painting, make sure there is plenty of ventilation and follow the manufacturer's instructions. Allow the paint to fully dry before lighting the stove and allow extra ventilation for the first couple of fires as some fumes may emit from the stove as the paint cures.

Scandia high temp enamel is available at your local Bunnings Warehouse.
Visit www.scandiastoves.com.au for details.

TROUBLE SHOOTING

Many people under estimate the importance of using a professional installer with experience in wood heating who adheres to Australian Standards to install their wood fire.

If you are having issues with your wood fire not working the way you think it should, we implore you to speak to your installer first; they can help you with issues such as burning too much or too little wood, smoke in the room when you open the door, blackened glass or build-up of creosote during use. A professional installer can also provide guidance on whether the problem is a manufacturing issue in this instance we will work with them to resolve any issues as soon as possible for you.

It is important to remember that all flue installations must be compliant with Australian Standards. A heater installed with a non-compliant flue configuration will not perform as advertised or as tested.

FIRE NOT BURNING

A wood heater not burning is generally caused by either a shortage of air and/or incorrect or damp fuel.
If fuel is not the problem check:

1.	That the air controls are opened.
2.	There is no blockage in the flue system.
3.	That the open end of the flue is above the height of any nearby obstructions.
4.	That there is a sufficient air supply into the room and that this supply is not being taken by an extractor fan.

GLASS BLACKENS

Glass usually blackens when:

1.	The fuel is not being burned efficiently because of starvation of air.
2.	Bad quality or damp fuel is being used.

Please note: For optimum efficiency always use a good quality dry hardwood.

SMOKE IN ROOM

If the wood heater is properly installed it should not emit any smoke into your room. Should this happen, check that your room is not air tight. This can easily be checked by opening a door or window. If the smoking stops you need to provide an additional air supply into the room. If this is not the problem, check if your chimney is blocked or obstructed and that you are not getting a down draught caused by the location of the open end of the flue pipe or chimney.

If the problem persists contact your installation company and ask them to get your chimney and stove installation checked.

FIRE BURNING TOO QUICKLY

This is usually caused by too much draught or air.

1.	Firstly try reducing the air supply to the wood heater by closing down your air controls, if this fails then you may have to adjust the door or you may have damage to the sealing.
2.	Close a thin strip of paper in the door, check to see if the paper stays in place or pulls out. If the paper pulls out easily you may need to adjust or replace the door seal.
3.	Check to see if the glass moves within the door frame. If it does you may need to tighten the glass retainer screws.
4.	Check the condition of the door sealing rope and the glass seal tape.

TROUBLE SHOOTING ....continued

CHIMNEY FIRE

Chimney fires occur when soot and creosote that have built up in the flue system ignite. If the wood heater is operated properly and the flue checked and cleaned regularly then chimney fires should not occur. These fires can be very dangerous and must be avoided. Try to maintain good, hot fires in the wood heater whenever possible and at least once in every firing open the air controls and allow the wood heater to burn on full for a short while until the entire fire bed is glowing red.

Check your flue system regularly for build-up of soot and creosote and clean as necessary. Chimney fires can be detected by sparks coming from the top of the chimney, a roaring sound coming from the area of the stove or chimney or vibration in the stove or chimney. In the event of a chimney fire, close the air controls, evacuate the building and call the fire department. Do not relight the stove after a chimney fire until the stove and flue have been checked and any necessary repairs have been carried out.

WARRANTY

SCANDIA LIMITED WARRANTY

This limited warranty is given by Scandia Heating (Aust) Pty Ltd (ACN 005 868 093) (Scandia or we) to the original retail purchaser (you) of the wood heater to which this Warranty applies.

Our goods come with guarantees that cannot be excluded under the Australian Consumer Law. You are entitled to a replacement or refund for a major failure and for compensation for any other reasonably foreseeable loss or damage. You are also entitled to have the goods repaired or replaced if the goods fail to be of acceptable quality and the failure does not amount to a major failure.

The benefits that this Warranty provides are in addition to other rights and remedies available to you under the Australian Consumer Law. This Warranty does not limit those rights and remedies.

SCOPE OF WARRANTY

If a defect in material or workmanship appears in the following parts within the corresponding warranty period after the date of the original purchase, such as to make the wood heater unfit for normal home use; and you comply with the requirements below regarding making a claim, then, subject to the exclusions below, we will replace or repair the relevant part or (at our option) replace the entire wood heater with the same or comparable model.

PART	WARRANTY PERIOD
Firebox	15 Years
All other parts (Including fans, other electrical items, top baffles, firebrick retainers)	1 Year

To the extent permitted by law, our liability under this Warranty is limited to this replacement or repair obligation.

CAUTION! IMPORTANT INFORMATION

For this Warranty to apply, you must fully complete the Warranty Registration Form via **scandiastoves.com.au/warranty**. Alternatively you can complete the Warranty Registration Card and mail it to our mail address (below) within 30 days after the original purchase. By completing this form, you also agree that, to the extent permitted by law, our liability to you on any basis in relation to the wood heater (other than under the Australian Consumer Law) is limited to our obligations under this Warranty.

WARRANTY ....continued

EXCLUSIONS

This Warranty does not apply:

1.	Where the defect is not due to the original design or manufacture of the part (including where the wood heater, part or accessory has been subject to accident, abuse, alteration, misuse or neglect or has been installed, inspected, operated or maintained negligently or not in accordance with applicable local laws and regulations and the manufacturer's printed instructions, if any)
2.	Where the firebricks, top baffle or fibreglass seal have not been replaced after becoming damaged or worn
3.	To any accessories or optional parts
4.	To any glass, paint, firebrick, fibreglass seal sold or used with the wood heater
5.	To any surface rust which may occur in transit, storage or use. This includes installations in close proximity to coastal areas and salt water which may cause rust to the appliance.

HOW TO MAKE A CLAIM

Any claim under this Warranty must be in writing to our mail address below. It must be sent within the applicable warranty period and must state:

1.	The model and serial number of the wood heater
2.	The place, price and date of purchase
3.	Reasonable details of the defect

To obtain replacement or repair under this Warranty, the wood heater must be returned to the original place of purchase (and collected from there once the replacement or repair is complete) at your cost. Scandia will not be responsible for any associated freight, disconnection or re-installation costs (including labour costs). Scandia will only be responsible for transport of the wood heater from the original place of purchase to Scandia's premises (and back), and replacement or repair in accordance with this Warranty.

REGISTER YOUR PRODUCT

REGISTER ONLINE

Register your product warranty online by visiting:
www.scandiastoves.com.au/warranty

Your data will be used by Scandia to provide you with information about your purchase upon request.

REGISTER BY MAIL

Alternatively, please complete the attached warranty card within 30 days of installation and return to:

Scandia Group Pty Ltd.
58 Access Way, Carrum Downs
Victoria, Australia, 3201.

SCANDIA AUSTRALIS M EXPLODED VIEW

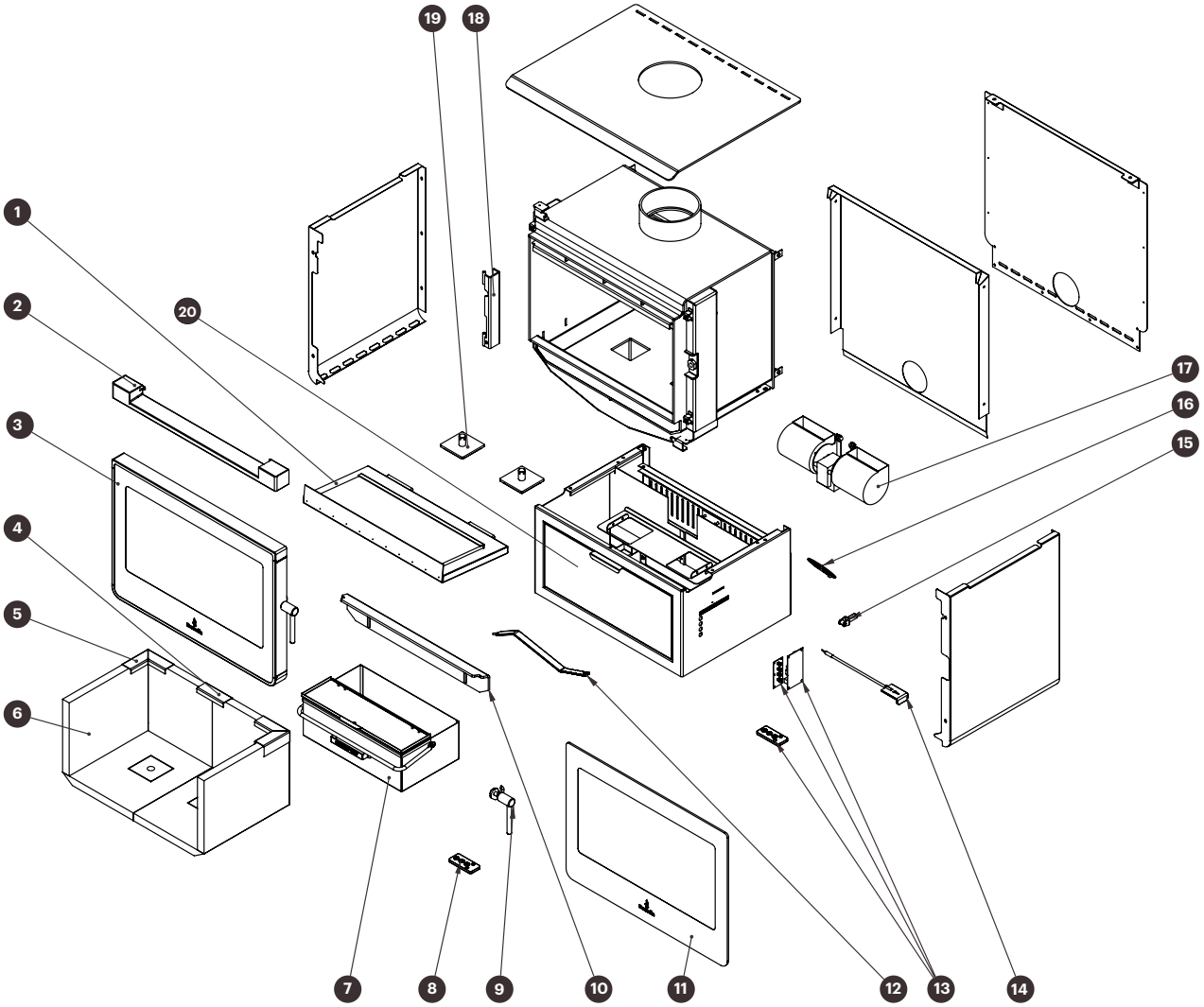

AUSTRALIS M SPARE PARTS LIST

LEGEND	SCANDIA PART NUMBER	DESCRIPTION	QTY
1	SG030700767	Baffle	1
2	SG030700360	Top Decorative Panel	1
3	SG031000160	Door Assy Australis M	1
4	SPSTY112	Retainer Brick Rear	1
5	SPSTY111	Retainer Brick Corner	2
6	SG030600036	Set Firebricks Australis M	1
7	SG030700353	Ash Drawer Assy.	1
8	SG030800108	Remote Control	1
9	SG031000180	Australis Door Handle Assembly	1
10	SG030700364	Ash Lip Assy	1
11	SG031000183	Australis M, Door Glass 1	1
12	SG030700941	Ash Plug Lifter	1
13	SG030800109	RF Module & Remote Kit	1
14	SG030701009	Air Control Rod Australis M	1
15	SG030700361	Door Latch	1
16	SG030700352	Air Flow Daisy	1
17	SG030800045	Horizontal Fan Assembly 1	1
18	SG030700765	Door Hinge	1
19	SG030700753	Ash Plug	2
20	SG030701003	Australis M Pedestal Door	1

SCANDIA AUSTRALIS L EXPLODED DIAGRAM

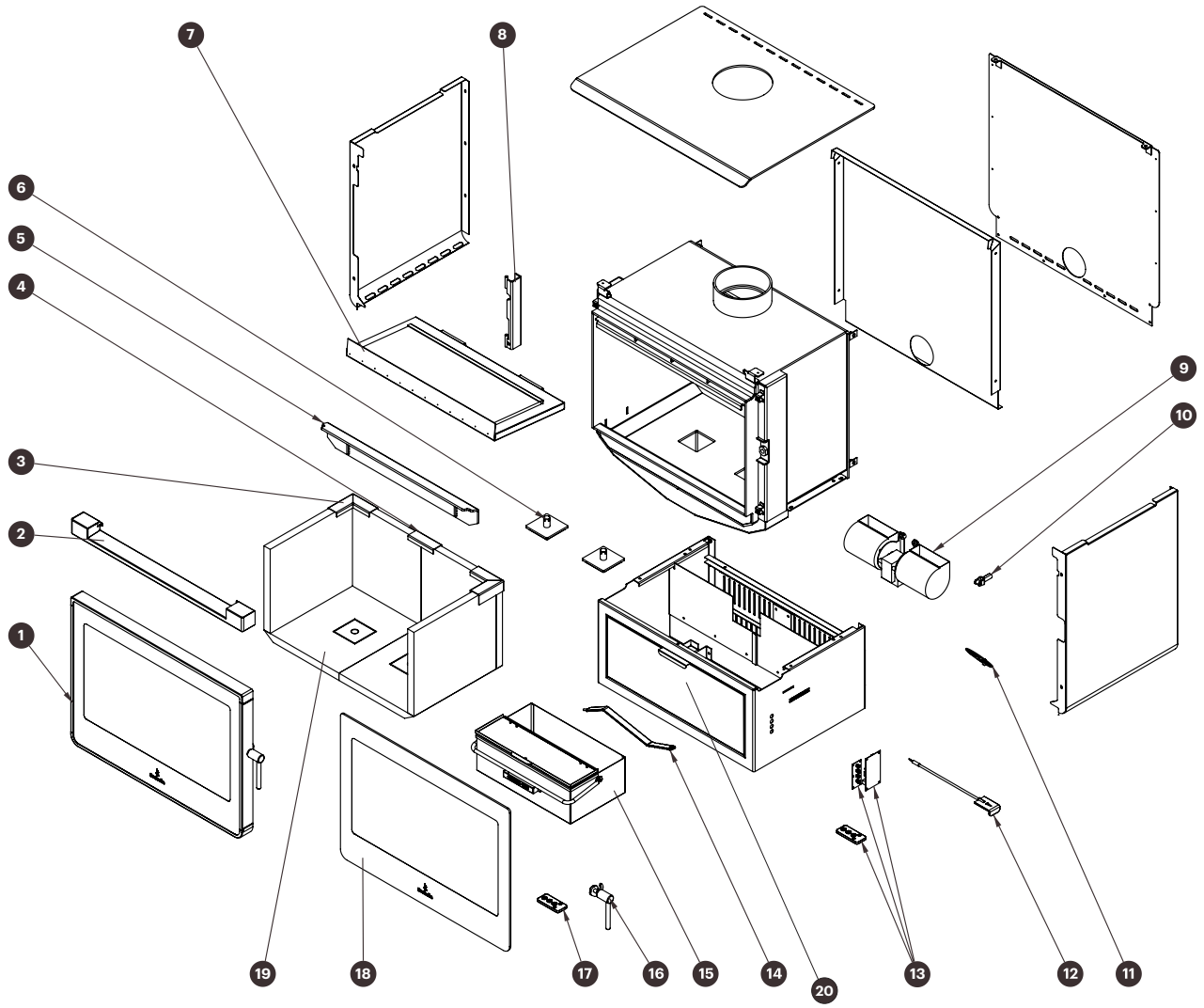

AUSTRALIS L SPARE PARTS LIST

LEGEND	SCANDIA PART NUMBER	DESCRIPTION	QTY
1	SG030700971	Australis L Door Assy	1
2	SG030700982	Australis L Top Grill Panel	1
3	SPSTY111	Retainer Brick Corner	2
4	SPSTY112	Retainer Brick Rear	1
5	SG030700998	Ash Lip	1
6	SG030700753	Ash Plug	2
7	SG030700986	Baffle	1
8	SG030700765	Door Hinge	1
9	SG030800045	Horizontal Fan Assembly	1
10	SG030700361	Door Latch	1
11	SG030700987	Airflow Daisy Wheel, With Bush	1
12	SG030701010	Air Control Rod Australis L	1
13	SG030800109	RF Module & Remote Kit	1
14	SG030700351	Ash Plug Lifter	1
15	SG030700353	Ash Drawer Assy	1
16	SG031000180	Australis Door Handle Assembly	1
17	SG030800108	Remote Control	1
18	SG031000184	Australis L Door Glass	1
19	SG030700941	Firebricks	1
20	SG030701011	Australis L Pedestal Door	1

Head Office
58 Access Way,
Carrum Downs VIC 3201
Australia

Scandia Group Pty Ltd
(03) 8579 5900
service@scandiastoves.com.au
www.scandiastoves.com.au

WARRANTY REGISTRATION CARD

MODEL NO:	SERIAL NO:
PURCHASED BY:	PURCHASER PHONE:
ADDRESS:	
EMAIL:	POSTCODE:
PURCHASED FROM:	DATE:
ADDRESS:	
INSTALLED BY:	DATE:
INSTALLER EMAIL:	INSTALLER PHONE:
INSTALLER NAME PRINT:	INSTALLER SIGNATURE:

REGISTER

REGISTER ONLINE

Register your product online by visiting **www.scandiastoves.com.au/warranty**
Your data will be used by Scandia to provide you with information about your product upon request.

REGISTER BY MAIL

Alternatively, complete this warranty card within 30 days of installation and return to:
Scandia Heating (Aust) Pty Ltd.
58 Access Way, Carrum Downs, Victoria, Australia, 3201

Please keep your receipt as this will authenticate your warranty.

HEAD OFFICE
58 Access Way
Carrum Downs, Victoria
Australia 3201

+61 (03) 8579 5900
info@scandiastoves.com.au
www.scandiastoves.com.au

Scandia

Scandia

www.scandiastoves.com.au